MALE END VIEW (P1)	FEMALE END VIEW (J1)	FEMALE END VIEW (J2)

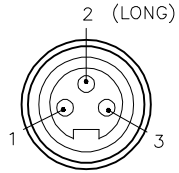

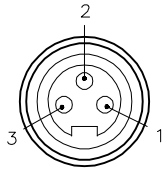

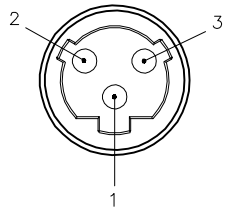

SPECIFICATIONS

CONTACT CARRIER MATERIAL	PVC
MOLDED MATERIAL/COLOR	PVC/BLACK
CONTACT MATERIAL/PLATING	BRASS/GOLD
COUPLING NUT MATERIAL/FINISH	ALUMINUM/CLEAR–ANODIZED (P1, J1)
COUPLING NUT MATERIAL/PLATING	BRASS/NICKEL (J2)
RATED CURRENT [A]	40 A COMBINED, 21 A DROP
RATED VOLTAGE [V]	600 V
CABLE JACKET MATERIAL/COLOR	TPE/BLACK
CONDUCTOR INSULATION MATERIAL	PVC/NYLON
NUMBERS OF CONDUCTORS [AWG]	3x14 AWG
TEMPERATURE RATING	–40°C to +90°C (–40°F to +194°F)
PROTECTION CLASS	MEETS NEMA 1,3,4,6P AND IEC IP67

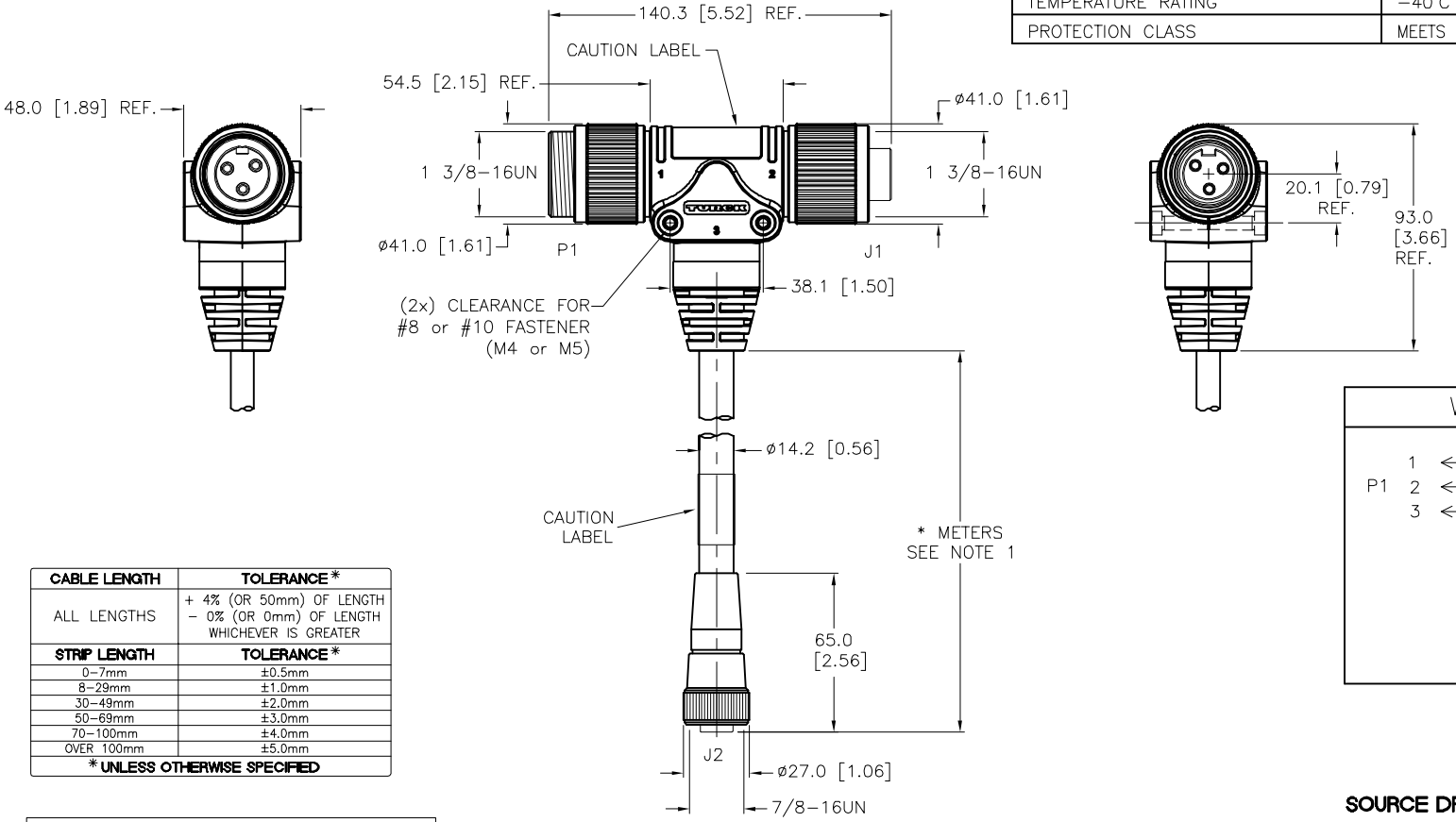

WIRING DIAGRAM

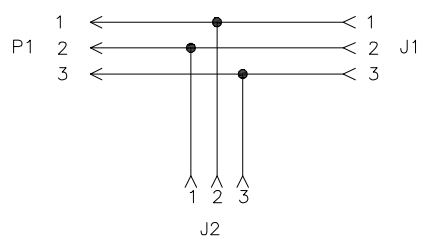

CABLE LENGTH	TOLERANCE *
ALL LENGTHS	+ 4% (OR 50mm) OF LENGTH – 0% (OR 0mm) OF LENGTH WHICHEVER IS GREATER
STRIP LENGTH	**TOLERANCE ***
0–7mm	±0.5mm
8–29mm	±1.0mm
30–49mm	±2.0mm
50–69mm	±3.0mm
70–100mm	±4.0mm
OVER 100mm	±5.0mm
* UNLESS OTHERWISE SPECIFIED	

SOURCE DRAWING – FOR REFERENCE ONLY

CAUTION:
RISK OF ELECTRICAL SHOCK
DO NOT DISCONNECT UNDER LOAD

NOTES:

1. "*" INDICATES CABLE LENGTH IN METERS. CONTACT TURCK TO ORDER SPECIFIC LENGTHS.

REV	DESCRIPTION	BY	DATE	ECO NO.
B	UPDATED CURRENT RATING	ER	04/26/19	69364

RELATED DOCUMENTS
1.
2.
3.
4.

3RD ANGLE PROJECTION

THIS DRAWING IS CONFIDENTIAL AND THE PROPERTY OF TURCK INC. USE OF THIS DOCUMENT WITHOUT WRITTEN PERMISSION IS PROHIBITED.

TURCK
3000 CAMPUS DRIVE
MINNEAPOLIS, MN 55441
1–800–544–7769
(763) 553–7300
(763) 553–0708 fax
www.turck.us

MATERIAL: SEE SPECIFICATIONS

FINISH: SEE SPECIFICATIONS

ALL DIMENSIONS DISPLAYED ON THIS DRAWING ARE FOR REFERENCE ONLY

CONTACT TURCK FOR MORE INFORMATION

DRFT: TV | DATE: 09/07/17
APVD: J.B. | SCALE: 1=3.0

UNIT OF MEASUREMENT
MILLIMETER [INCH]
DO NOT SCALE THIS DRAWING

DESCRIPTION: GSDA/GKDA/RKM 34P–*

IDENTIFICATION NO.

REV: B

FILE: 777040225

SHEET 1 OF 1